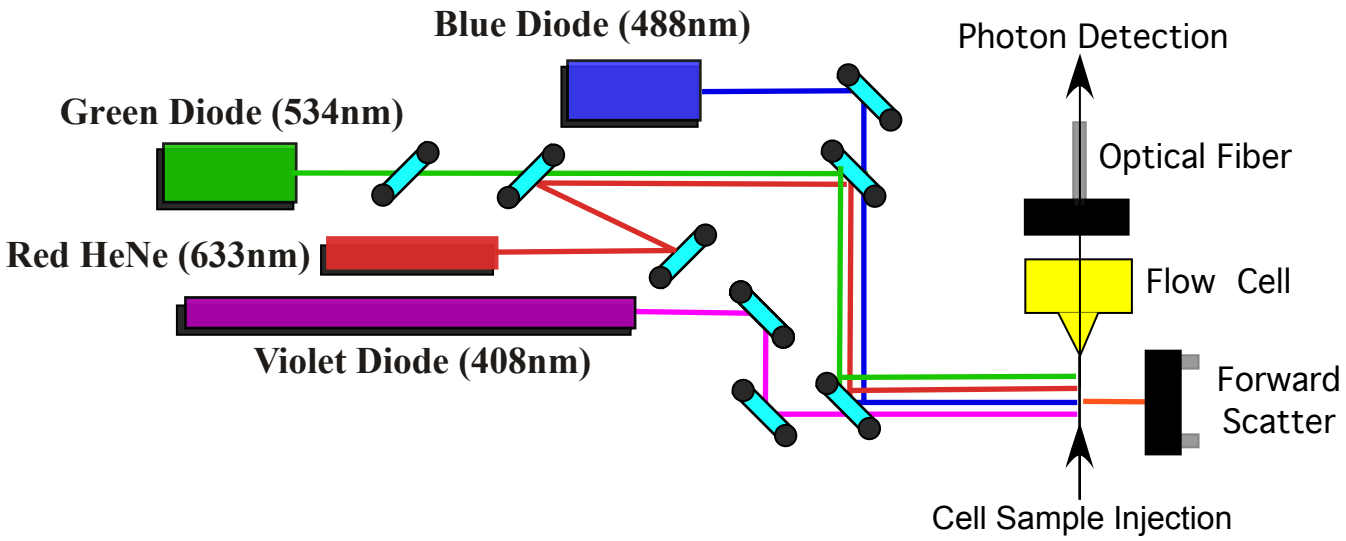
Blue Diode (488nm)
Green Diode (534nm)
Red HeNe (633nm)
Violet Diode (408nm)
Photon Detection
Optical Fiber
Flow Cell
Forward Scatter
Cell Sample Injection

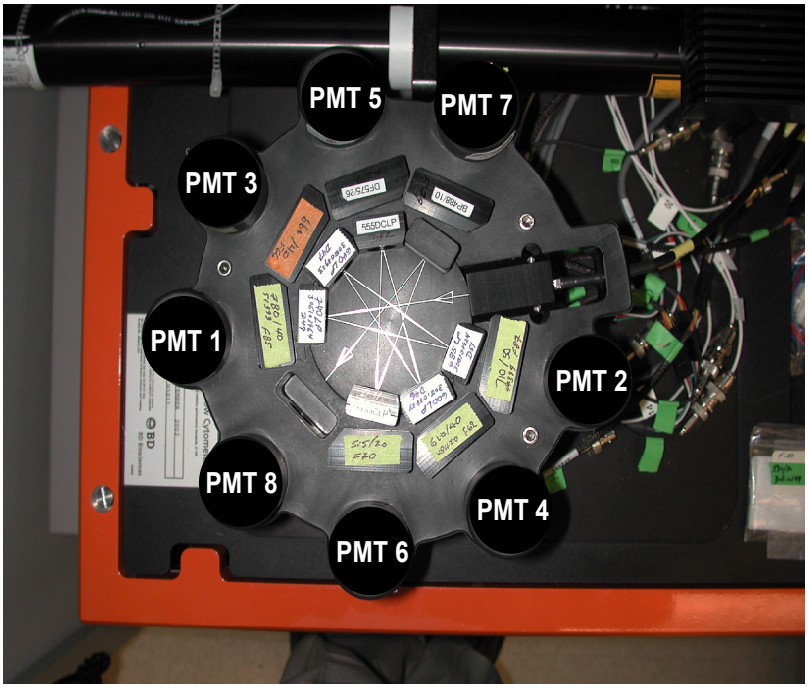
PMT 5
PMT 7
PMT 3
PMT 1
PMT 2
PMT 8
PMT 4
PMT 6

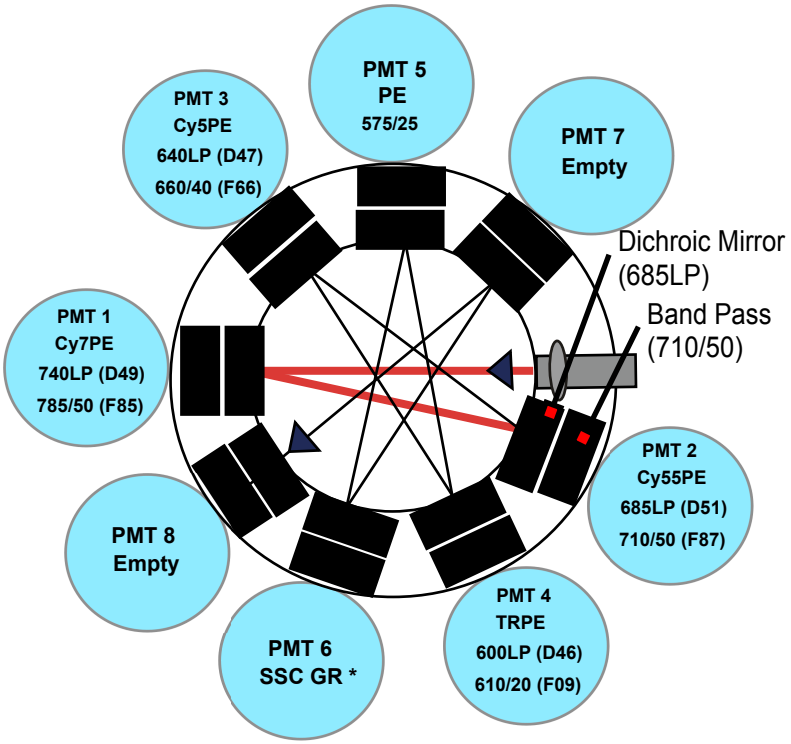
PMT 5
PE
575/25
PMT 3
Cy5PE
640LP (D47)
660/40 (F66)
PMT 7
Empty
Dichroic Mirror
(685LP)
Band Pass
(710/50)
PMT 1
Cy7PE
740LP (D49)
785/50 (F85)
PMT 2
Cy55PE
685LP (D51)
710/50 (F87)
PMT 8
Empty
PMT 4
TRPE
600LP (D46)
610/20 (F09)
PMT 6
SSC GR *